FECOM

THIRD ANGLE PROJECTION

REMOVE ALL BURRS & SHARP EDGES

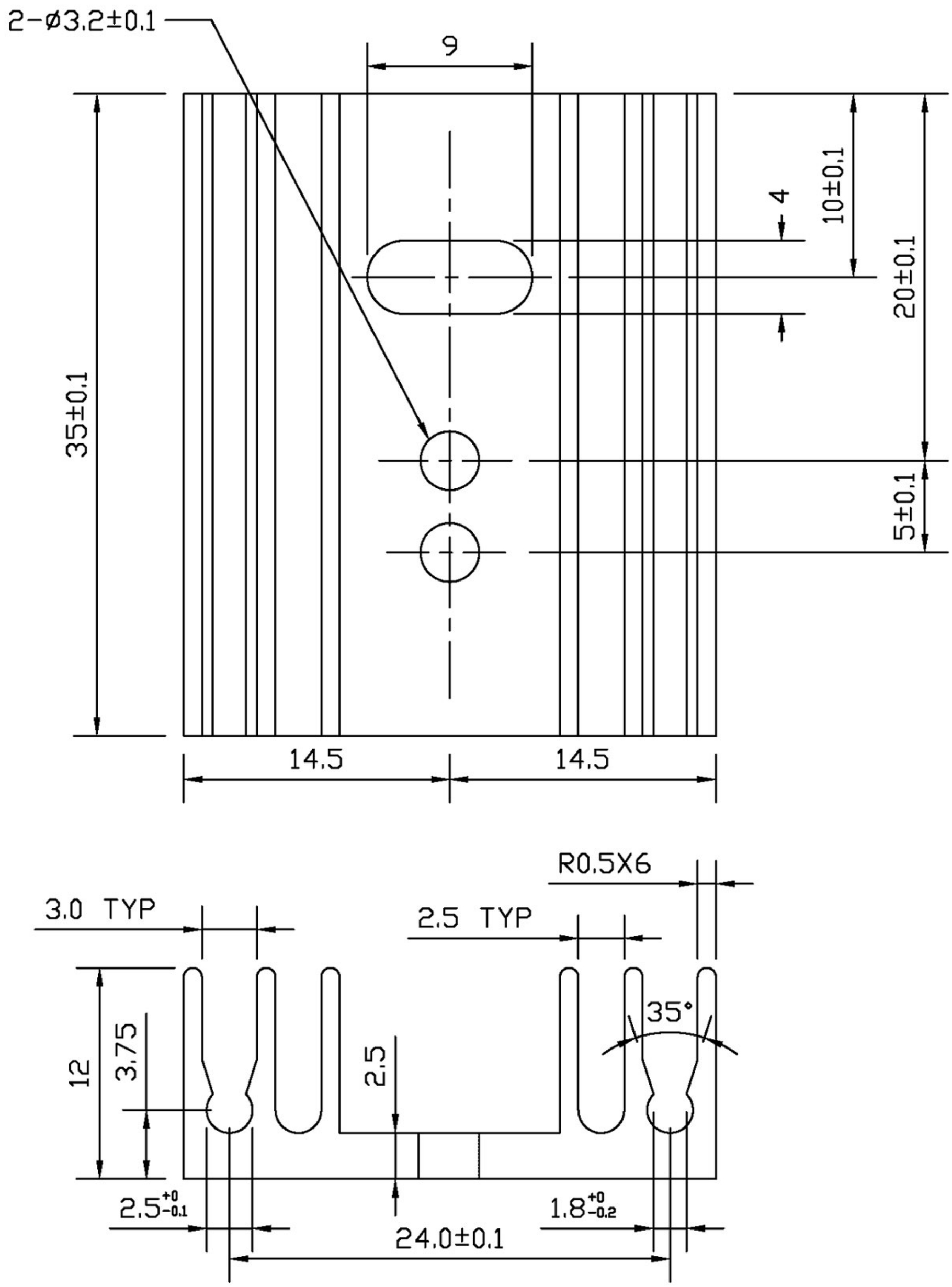

MATERIAL: AL6063-T5	**FINISH: BLACK ANODIZE**
HEAT SINK	**FECOM P/N: FE-T220-0051-01**