FECOM CORPORATION Tel. 800.292.3362

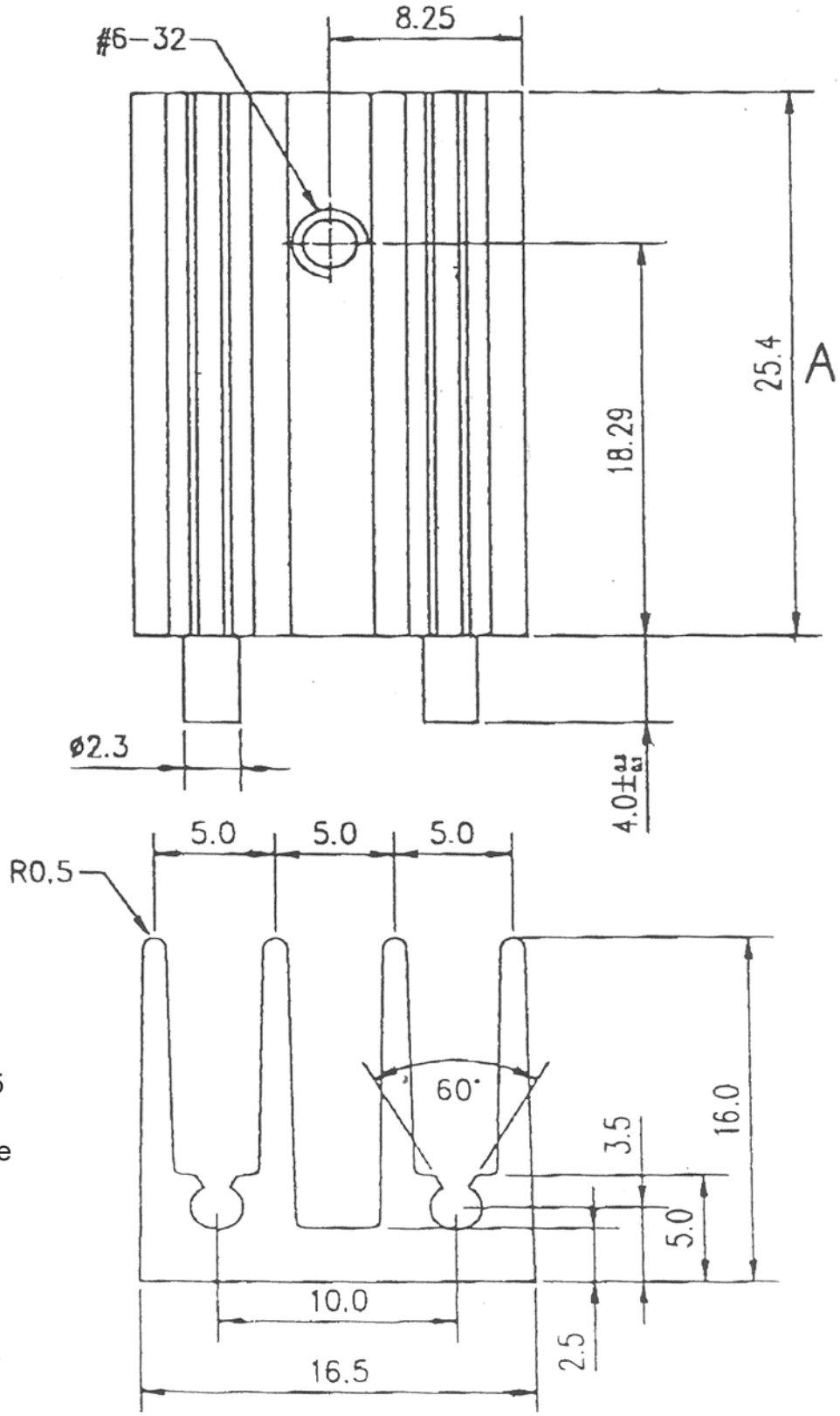

Material: AL 6063-T5

Finish: Black Anodize

CODE	A
-01	25.4 mm
-02	38.1 mm
-03	50.8 mm

Scale: 3:1	DATE: 6/11/1	DWG No. 10611D9

FE-05-0530-0X